Spare parts list – Tormek T-8

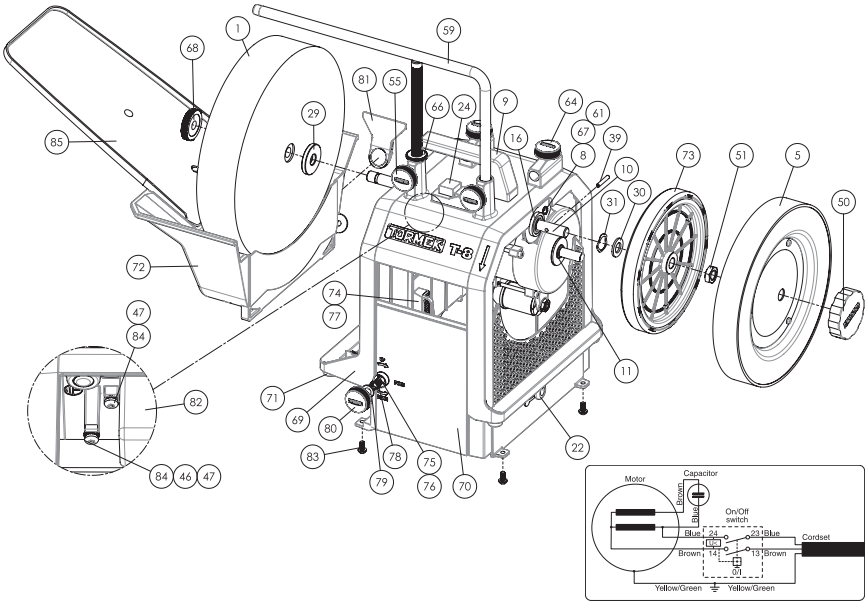

No.	Denomination	Qty	Part no.
1	Grindstone	1	6011
5	Honing wheel	1	0591-07
8	Mounting shaft	1	1015
9	Handle incl. nut and washer	1	3041
10	** Main shaft	1	1041
11	Motor	1	6021 (230 V) 6161 (115 V)
16	Nylon bearing	2	3061
21	* Cord set	1	6031 (SE) 6041 (CH) 6043 (US) 6050 (JP) 6053 (GB) 6055 (AU) 6057 (ZA)
22	Cord set bushing	1	6081 (230 V) 6191 (115 V)
24	Switch	1	6320 (230 V) 6330 (115 V)
29	Washer for the stone	1	0130
30	Washer for the drive wheel	1	5081
31	Wave spring washer	1	5410
39	Locking pin	1	5071
46	Folded washer	2	5001
47	Locking washer	3	5021
50	Locking knob for honing wheel	1	7041
51	Nut. M12 h=4	1	1051

No.	Denomination	Qty	Part no.
55	Locking screw	2	7031
59	Universal Support excl. adjusting nut	1	0220
61	* Distance spring for the motor	1	0561
64	Locking screw	2	7120
66	Adjusting nut with scale	1	1162
67	* Bushing for mounting shaft	1	3123
68	EzyLock	1	1190
69	Housing	1	2000
70	Plastic cover	1	3070 (230 V) 3130 (115 V)
71	Rubber foot	4	3198
72	Water trough	1	3090
73	Drive wheel with friction ring	1	2010
74	Water trough holder	1	2020
75	Gear shaft	1	2070
76	Locking head	1	2080
77	Guide rail	2	3110
78	Spring	1	0800
79	Washer 8.4×15×1.6 mm	1	5020
80	Knob water trough	1	7005
81	Scraper water trough	1	3100
82	Cover for switch	1	3080
83	Screw M5×10 mm	4	5590
84	Screw M4×8 mm	3	5600
85	Water chute	1	3510

** Not shown on drawing.*
*** Available only with MSK-250.*

Weight machine only: 14.8 kg (32.6 lbs)